Aquatrol Inc. is the owner of this print and design thereon

Revised 1/7/2022

Safety Relief Valve for Air / Gas / Steam / Liquid
Certifications: ASME - NB Section VIII, PED/CE, CRN

Item	Description	Material
1	Nozzle	B16 Brass
2	Ring Lock Screw	B16 Brass
3	Lower Ring	SA351-CF8M SS
4	Disc Holder	B16 Brass
5	Disc Holder Shaft	B16 Brass
6	Disc Guide	B16 Brass
7	Bonnet	B16 Brass
8	Hood Seal	PTFE
9	Seal Wire	Steel / Lead
10	Hood	B16 Brass
11	Pressure Screw	B16 Brass
12	Lock Nut	B16 Brass
13	Spring Plate	B16 Brass
14	Spring	302/17-7 SS
15	Spring Post	B16 Brass
16	Spring Pin	18-8 SS
17	Disc Guide Seals (2)	PTFE
18	Disc	SA479-316 SS
19	Body	B584 C84400
20	Nozzle Seal	PTFE
21	Nameplate	Stainless
22	Lock Screw Seal	PTFE

Series 740 Seating Options

ITEM	Description	Material
23	Disk	PTFE
24	O-Ring Disk	SA479-316 SS
25	Screw	18-8 SS
26	Disk Insert	SA479-316 SS
27	O-Ring	Various

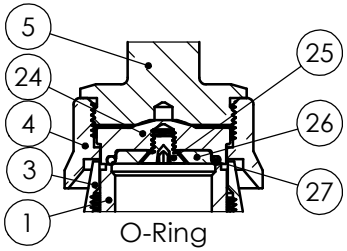

O-Ring

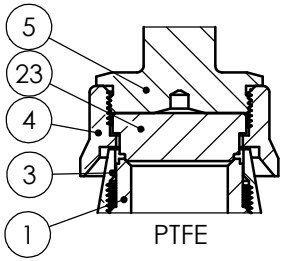

PTFE

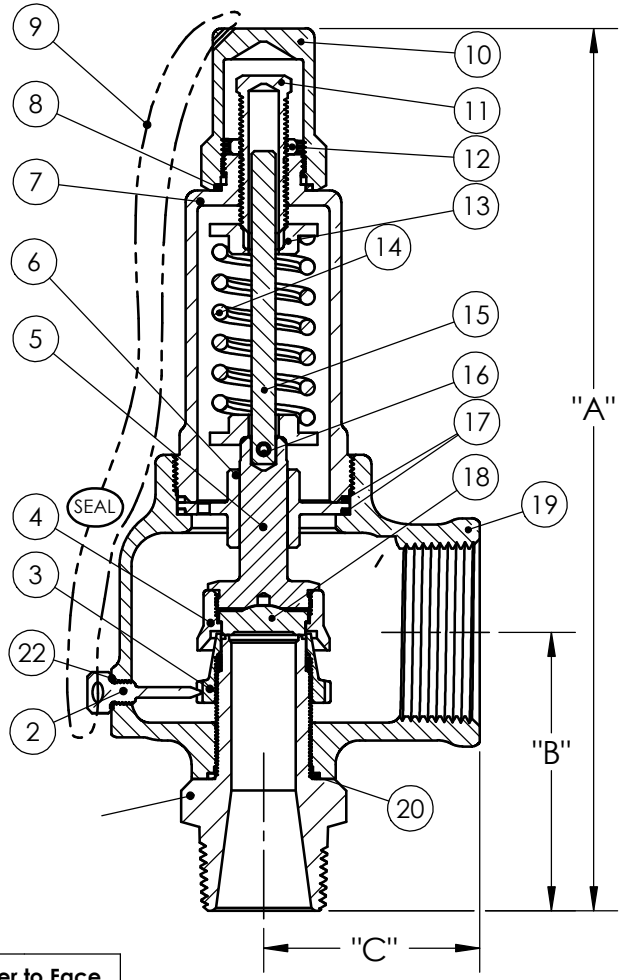

[1] 1/2" E Orifice is ASME/CE Air/Gas and Steam Only

Orifice	Max Set Pressure	Connections MNPT x FNPT		Closed Cap "A"	Lift Lever "A"	Center to Face "B"	Center to Face "C"	Orifice	Max Set Pressure	Connections MNPT x FNPT		Closed Cap "A"	Lift Lever "A"	Center to Face "B"	Center to Face "C"
D	350	1/2"	3/4"	7-3/8"	8-1/8"	2-3/8"	1-5/8"	F	350	1-1/4"	1-1/2"	9-1/4"	9-5/8"	2-7/8"	2-1/4"
D	350	1/2"	1"	7-3/8"	8-1/8"	2-3/8"	1-5/8"	F	350	1-1/2"	1-1/2"	9-1/4"	9-5/8"	2-7/8"	2-1/4"
D	350	3/4"	3/4"	7-3/8"	8-1/8"	2-3/8"	1-5/8"	G	350	1-1/4"	2"	10-1/4"	10-5/8"	3-3/8"	2-5/8"
D	350	3/4"	1"	7-3/8"	8-1/8"	2-3/8"	1-5/8"	G	350	1-1/2"	2"	10-1/4"	10-5/8"	3-3/8"	2-5/8"
D	350	1"	1"	7-3/8"	8-1/8"	2-3/8"	1-5/8"	G	350	2"	2"	10-1/4"	10-5/8"	3-3/8"	2-5/8"
E[1]	350	1/2"	1"	8-1/8"	9"	2-5/8"	2"	H	350	1-1/2"	2"	11-3/4"	12-1/4"	3-1/2"	2-7/8"
E[1]	350	1/2"	1"	8-1/8"	9"	2-5/8"	2"	H	350	2"	2"	11-3/4"	12-1/4"	3-1/2"	2-7/8"
E	350	3/4"	1"	8-1/8"	9"	2-5/8"	2"	H	350	1-1/2"	2-1/2"	11-3/4"	12-1/4"	3-1/2"	2-7/8"
E	350	3/4"	1-1/4"	8-1/8"	9"	2-5/8"	2"	H	350	2"	2-1/2"	11-3/4"	12-1/4"	3-1/2"	2-7/8"
E	350	1"	1"	8-1/8"	9"	2-5/8"	2"	H	350	2-1/2"	2-1/2"	12"	12-1/2"	3-3/4"	2-7/8"
E	350	1"	1-1/4"	8-1/8"	9"	2-5/8"	2"	J	350	2"	3"	14-1/4"	14-1/2"	4"	3-1/4"
E	350	1-1/4"	1-1/4"	8-1/8"	9"	2-5/8"	2"	J	350	2-1/2"	3"	14-1/4"	14-1/2"	4"	3-1/4"
F	350	1"	1-1/2"	9-1/4"	9-5/8"	2-7/8"	2-1/4"	J	350	3"	3"	14-1/4"	14-1/2"	4"	3-1/4"

Inlet Sizes from 1/2" to 3"
Max Temp : 406°F
Max Pressure : 350 P.S.I (250 P.S.I. Steam)
Back Pressure : 10% of set, max 50 P.S.I.
(whichever is less)

Aquatrol VALVE COMPANY, INC.

PART NAME	Series 740
Date: 7/18/2013	Part Number
Drawn by:	740-01-12
Approved by:	